Installation of the recessed tracks and Led Strip

The installation of the tracks is initially the same for the LightLight and Sense System. However, please note the instructions when connecting the Buschfeld light track.

For the recessed tracks In48, In and Led Strip you need the dry installation profile (item no. 98200), depending on the course of the route also the corner elements (item no. 98050 and 98055). Prepare the substructure for the assembly of the drywall profiles. Determine the approximate position of the power feed = connection of the Buschfeld tracks.

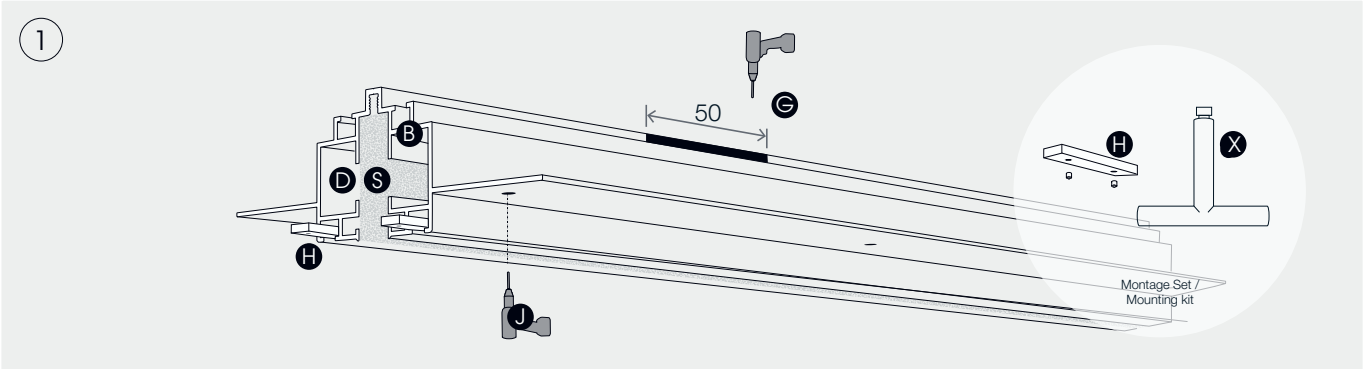

Prepare recessed profile (B) for installtion:
- DO NOT REMOVE protective foam (S).
- Where ist the postion of the power feed for recessed tracks or led strip? Use the outlet at the end of the profile or for central feed a position along the profile **(G)**. Deburr carefully so that the connection strands are not damaged.
- Cables can be led laterally in the cable ducts **(D)** up to the feed.
- Profiles can be connected in rows by inserting the profile connectors **(H)** into the slots provided on the lower section of the profiles.
- The profile is screwed onto the wall and ceiling substructure from below.

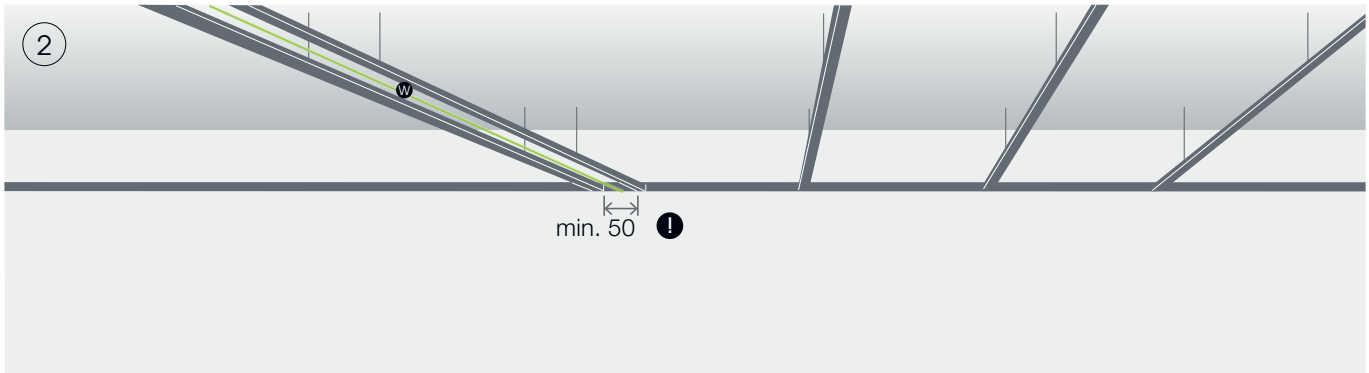

Mount the substructure for the drywall ceiling, ensuring there is sufficient space to mount the recessed profile. Minimum 50 mm. Use a laser level **(W)** to align the route of track.

Installation of the recessed tracks and Led Strip

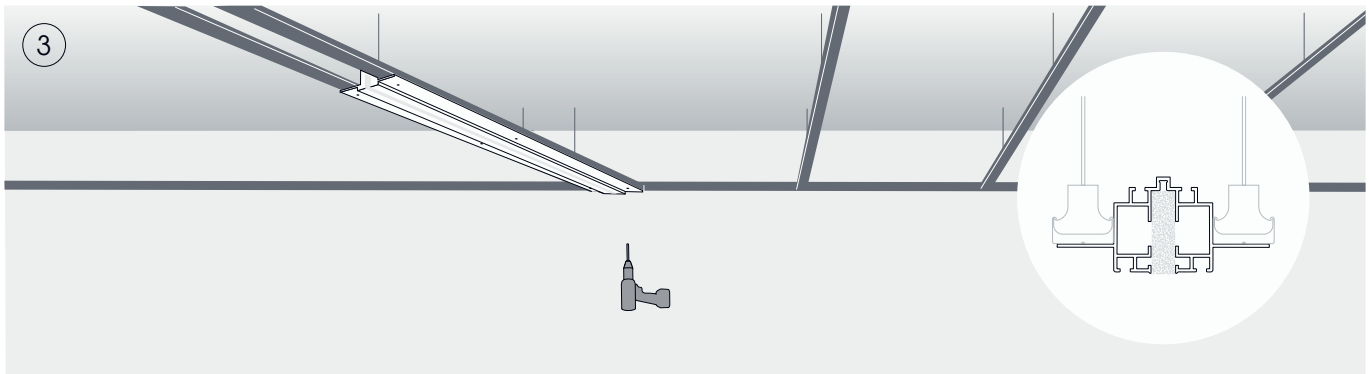

Screw the recessed profile to the substructure from below.

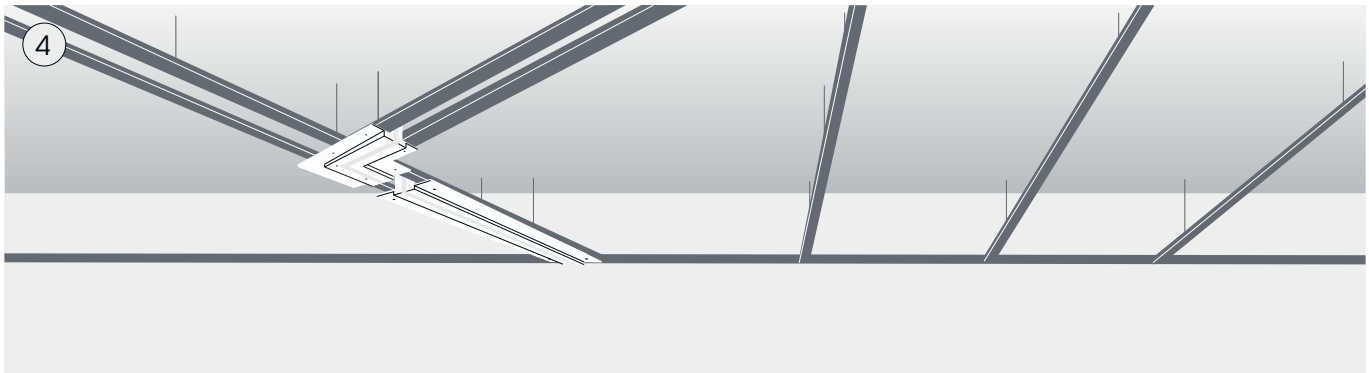

In the case of corner situations: corner elements can be ordered, or mitre cuts can be made on 2 profiles.

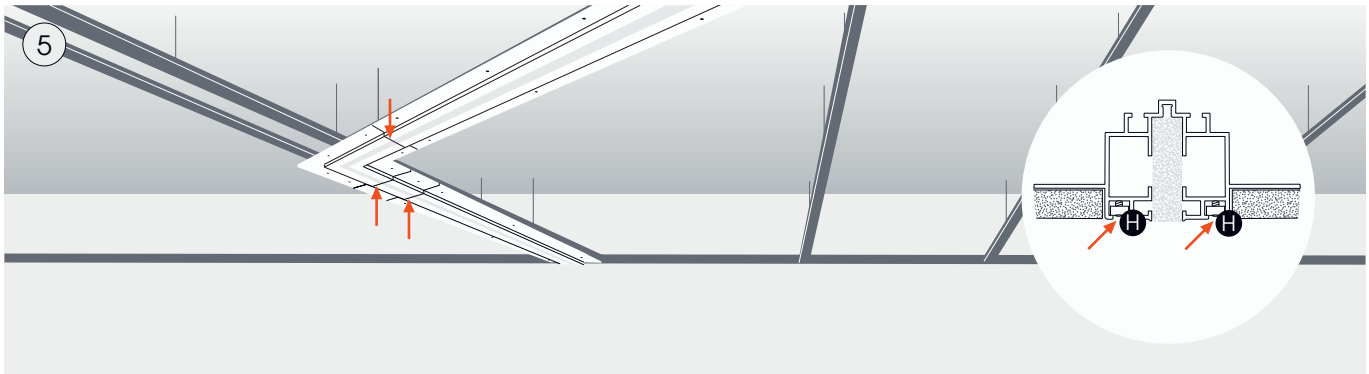

Insert the profile connectors (H) and align the recessed profiles.

Installation of the recessed tracks and Led Strip

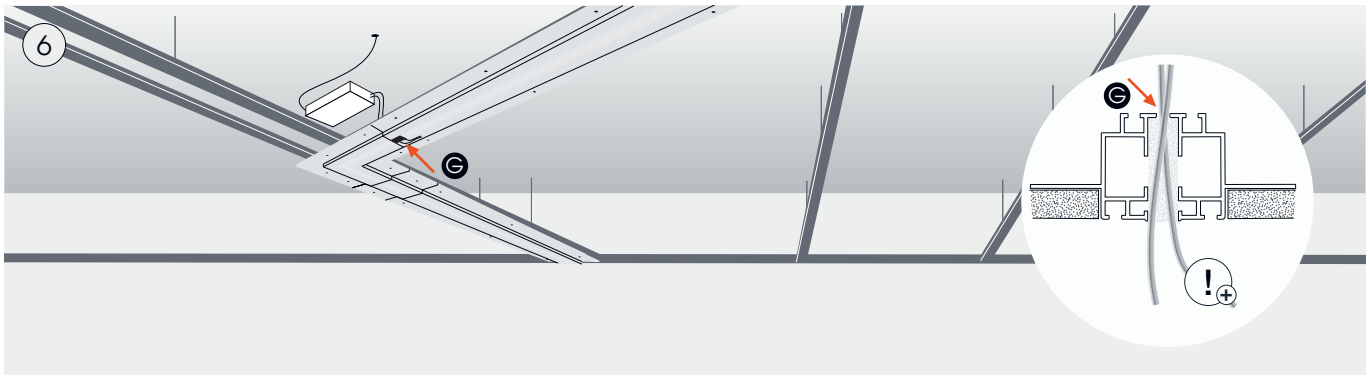

Connect the control gear for concealed installation, pass the secondary cable through the recessed profile (in this case) **(G)**

Cable feed: Use only litz wires with wire end sleeves in the screw contacts of the recessed tracks. Please note the marking (+) for the connection of the live conductor.

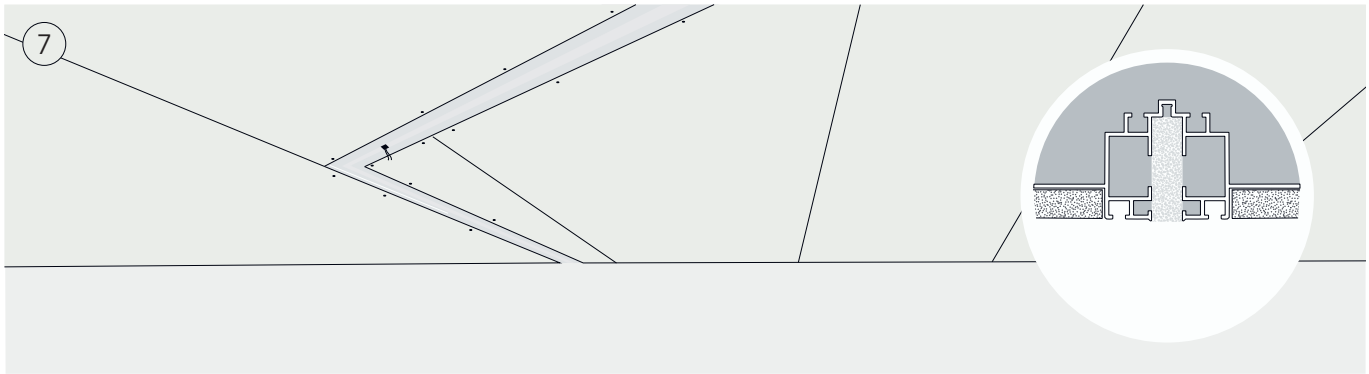

When mounting drywall ceilings, position the plasterboard over the wings of the recessed profile.

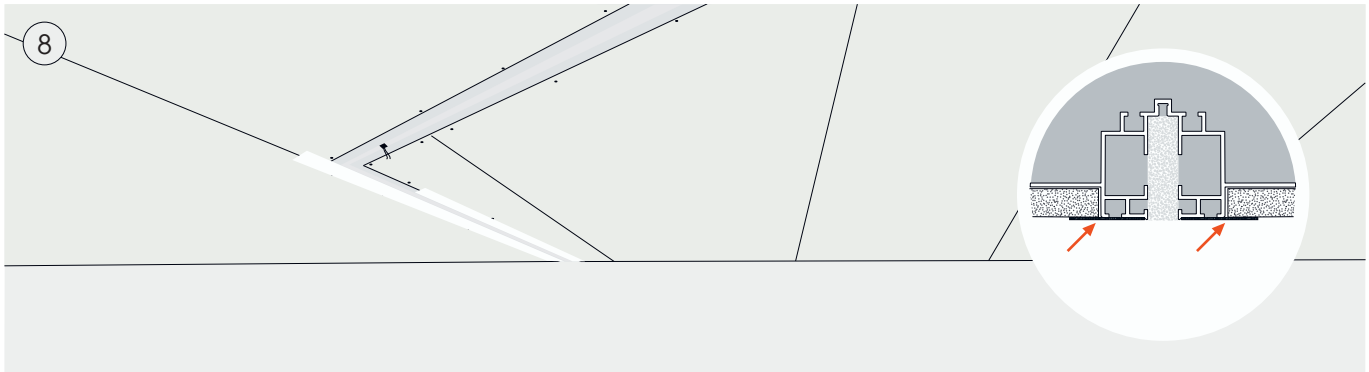

Apply the sealing strip to align with the protective foam.

Installation of the recessed tracks and Led Strip

Fill the ceiling to create a smooth finish. Paint the ceiling. When it is dry carefully loosen the protective foam **(S)** and remove it from the recessed profile.

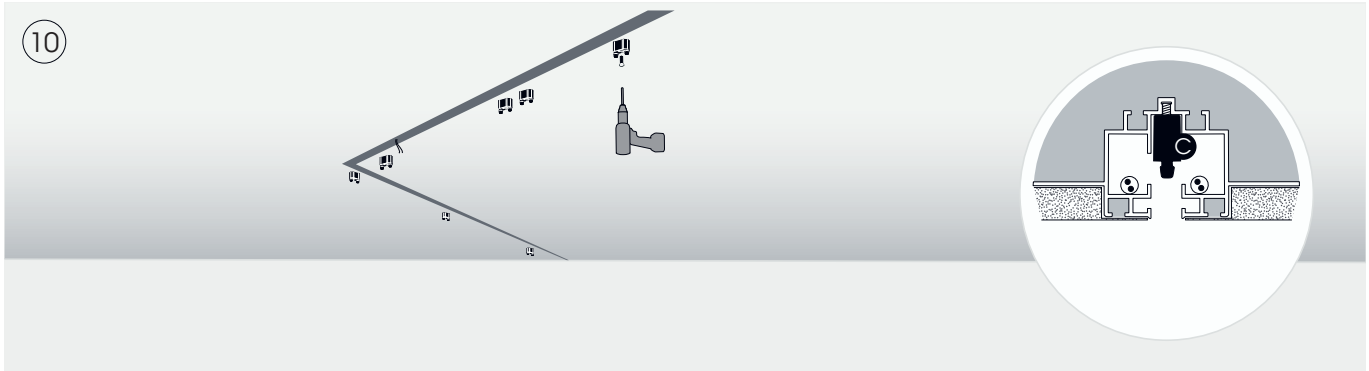

Screw in the mounting clips **(C)** for the recessed track and make sure they are aligned correctly.

The fastening clips with magnetic button **(M)** for the Led Strip modules are included with the Led Strip packages; they are also screwed into the drywall profile.

Installation of the recessed tracks and Led Strip

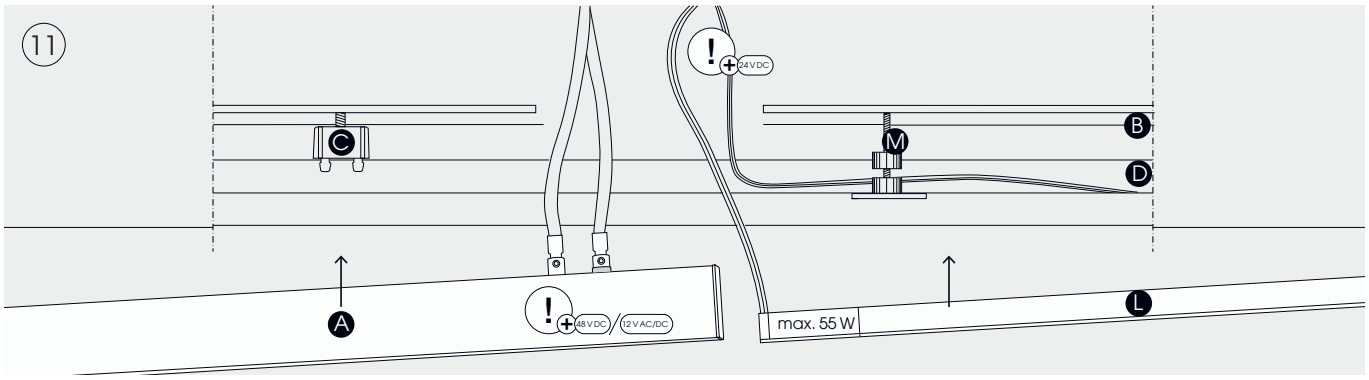

Lighting tracks with power feed for cable feed **(A)**: Use only litz wires with wire end sleeves in the screw contacts of the recessed tracks.

Lighting tracks Sense System or LightLight:
When connecting the power feed and the control gear, **the + / - polarity must be observed!**
+ Brass inner conductor of the track
- track itself
The polarity is usually also marked with a sticker on the power feed.

Led Strip (24 V DC):
Please note the marking (+/-) for the connection!
max. 55 Watt per power feed, than feed in again.
Led Strip modules **(L)** can be mounted alternately with the lighting tracks of the Sense System or Light Light.

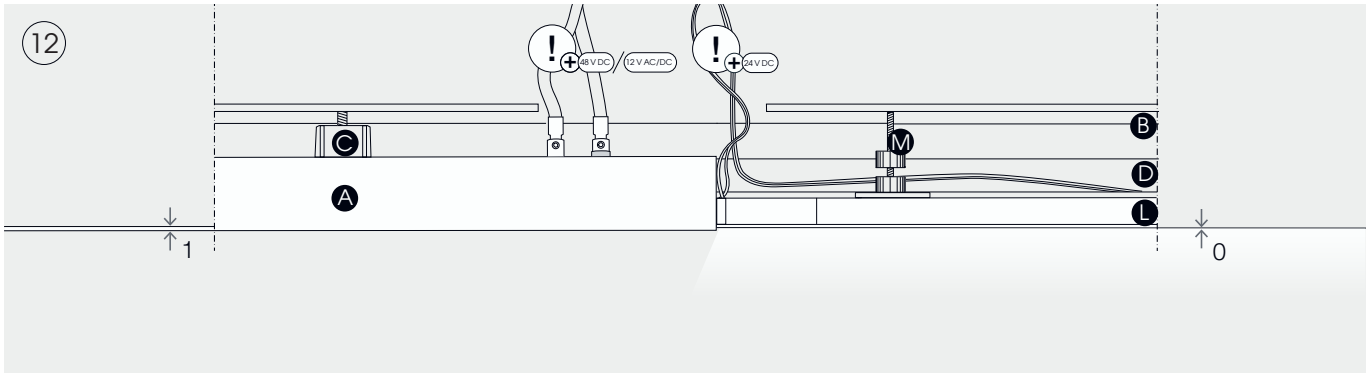

Push the connecting strands back into the drywall profile carefully. With light pressure click the track **(A)** onto the fastening clips **(C)**. The Led Strip Module **(L)** can easily be snapped onto the magnetic holder **(M)**. **(B)** identifies the drywall profile with cable duct **(D)** for additional cables in a sectional view.

Connecting Tracks
in48 & in

PLEASE READ THE GENERAL INFORMATION ON THE SENSE SYSTEM!

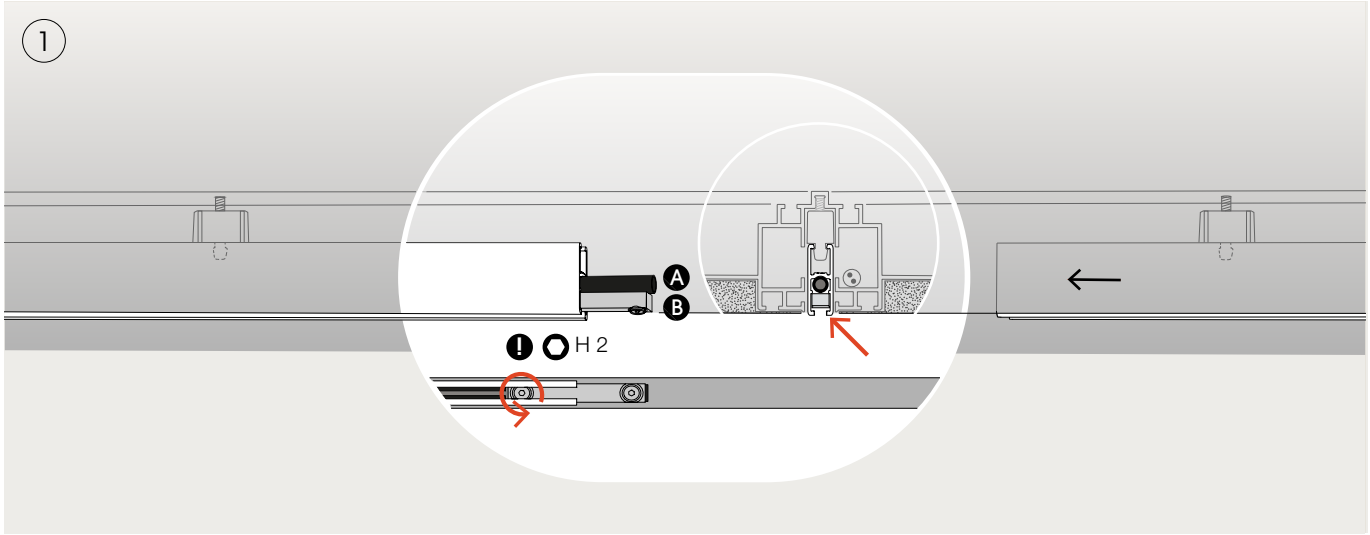

Slide the electrical connector **(A)** onto the inner conductor **(I)** of the first section of track. Insert the mechanical connector **(B)** into the track, as indicated, and screw firmly into place.

Attention!
The screws of the connector part (B) must be guided in the track channel. Make sure you tighten the screws by turning them in the right direction! The countersunk screws in connector are screwed into place by turning them in an anti-clockwise direction and press from the inside into the profile of the track.

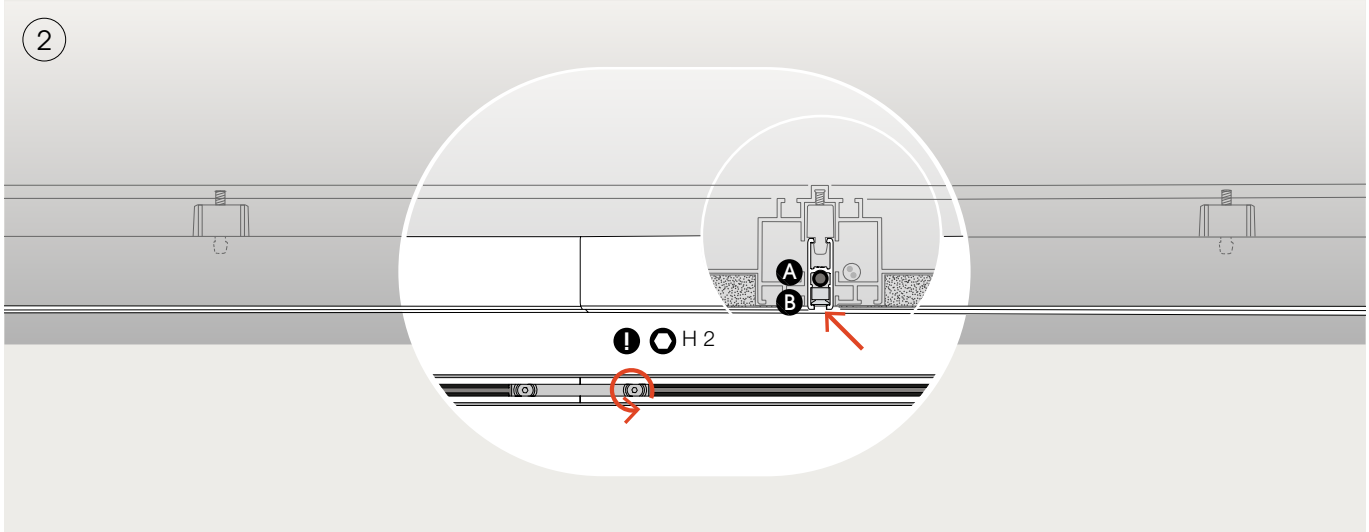

Press the sections of track together. Screw the other side of the track into place.

Attention! Make sure you tighten the screws by turning them in the right direction!
The countersunk screws in connector (B) are screwed into place by turning them in an anti-clockwise direction and press from the inside into the profile of the track.

Cutting track to length on site
in48 & in

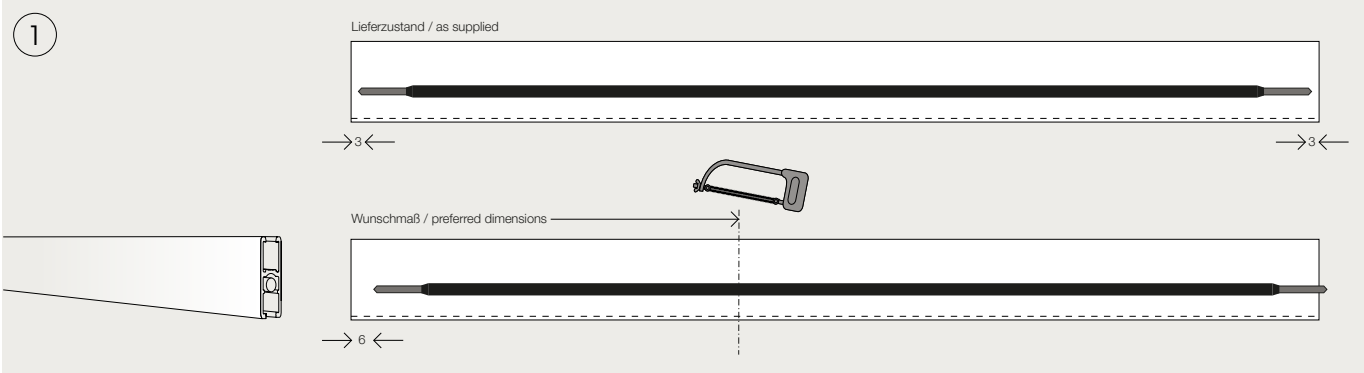

Position the inner conductor on the side not to be sawn so that it ends 6 mm short of the end of the track profile. Saw the track and the inner conductor together. Use a mitre saw to ensure a straight cut.

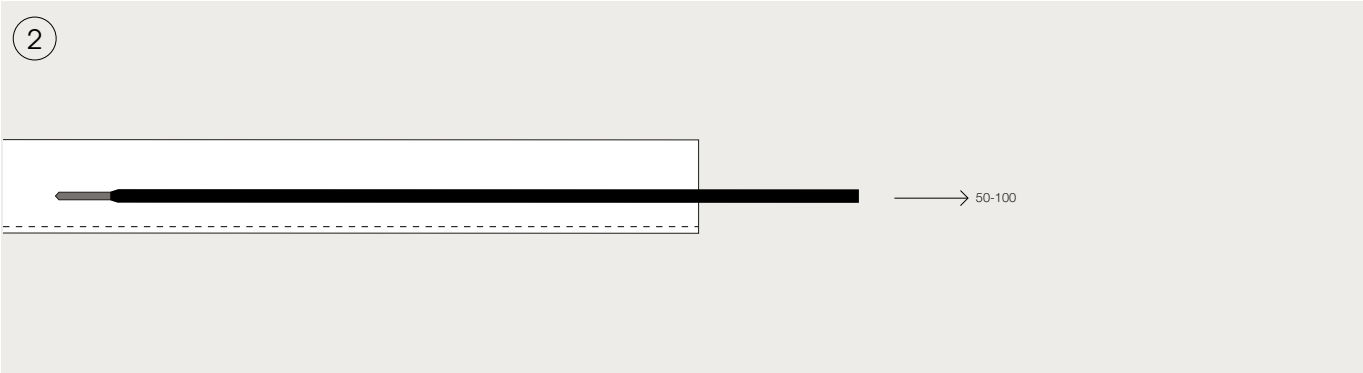

Push the inner conductor with the protective insulation approx. 50 to 100 mm out of the profile.

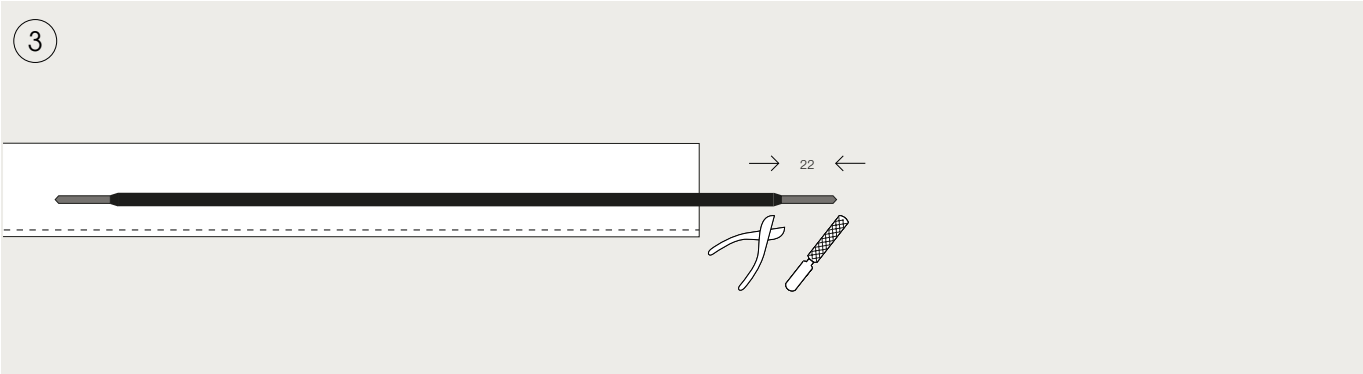

Strip 22 mm, trim carefully (taper) so as not to damage the contact interfaces in the electrical connectors.

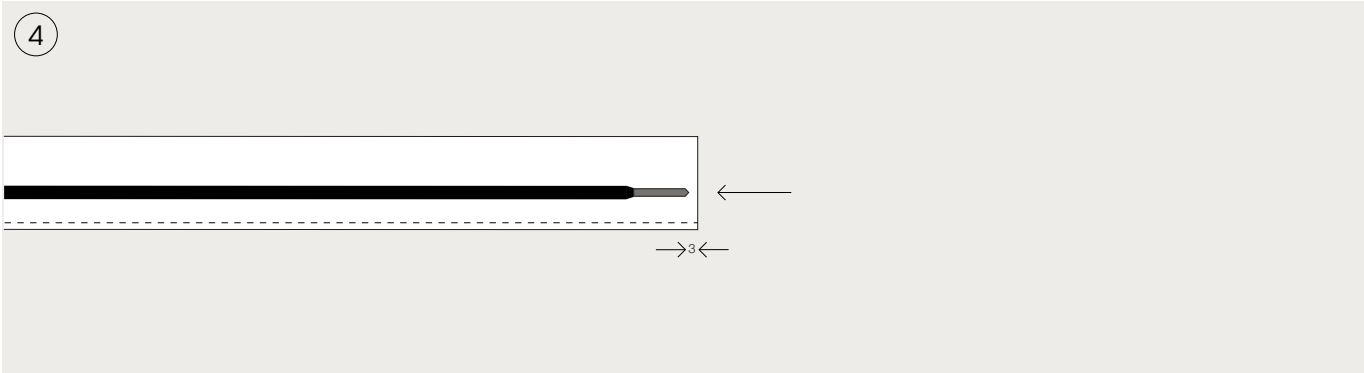

Re-insert the inner conductor into the track profile so that the end of the inner conductor is offset 3 mm on the inside on both sides of the track

buschfeld Sense System (48V)

DE
Allgmeine wichtige Hinweise.
Bitte sorgfältig lesen.

Gerät darf nicht im Hausmüll entsorgt werden.

Konformitätserklärung gemäß EU-Verordnung.

Betriebsspannung des Sense System ist 48 V Schutzkleinspannung. Die Systemleuchten können auch unter Spannung eingeriegelt werden. Die Leuchten sind Hot Plug** fähig. Es wird empfohlen, das Einriegeln oder Tauschen von Leuchten erst nach vorheriger Unterweisung durch eine Fachkraft durchzuführen.

Leuchte / System darf nur in trockenen Innenräumen eingesetzt.

Die Installation der System-Lichtschienen muss durch Fachpersonal erfolgen.Spannungsfrei arbeiten.

Die Angaben der technischen Daten beziehen sich auf den Tag der Erstellung. Abweichungen, sowie Änderungen im Zuge des technichen Fortschritts bleiben vorbehalten. Projektbezogene Produkte und Sonderanfertigungen werden individuell gefertigt, daher können Werte und Maße abweichen.

Fotos und Zeichnungen zeigen die Leuchte und Systembauteile zu Imagezwecken. Anpassungen in Elektronik, Ausstattung und Design bleiben vorbehalten.

Externe Dimmer sind nicht zulässig. Die Lichtsteuerung erfolgt ausschließlich über spezifizierte wireless Schnittstellen Bluetooth via Casambi oder Xicato.

buschfeld

Das Original LightLight® Lichtschienensystem wird seit 1989 von uns produziert. 2016 ist das Sense System® (48 V) entstanden. Es basiert auf dem LightLight System und bietet alle Möglichkeiten einer digitalen Lichtsteuerung über Bluetooth Funkstandard.
Die Fixierung aller Leuchten am System und deren elektrische Versorgung erfolgt durch die Systemadapter. Buschfeld® Lichtsysteme sind in sich geschlossene Einleiter-Systeme. Ohne Anpassung und Prüfung können KEINE Leuchten und Komponten anderer Hersteller in Buschfeld Lichtsystemen betrieben werden. Die Leuchten aus dem LightLight® System (12 V) können nicht im Sense System® (48 V) betrieben werden. LightLight Systeme können jedoch nach Prüfung durch eine Elektro-Fachkraft auf 48 V, Sense System umgebaut werden. Bitte kontaktieren Sie uns. Zusammen prüfen wir welche Schritte für eine Umrüstung notwendig sind.

Die Maximallast beachten! Maximallast des Systems ist durch den maximalen Strom 12,5 A bei 48 V begrenzt, dies entspricht einer Belastung von 600 W.

Sense System 48 V DC

Innerhalb des Sense Systems® bietet Buschfeld Design zwei Lichtsteuerungs Protokolle an. Für die Erstellung von Lichtszenen, -gruppen oder anderen Einstellungen sind die App/Programme von Casambi oder Xicato unbedingt notwendig. Die Sense System Leuchten sind bei Auslieferung sofort Einsatz bereit. Buschfeld Design nimmt jedoch keine Ersteinstellung oder Programmierungen vor, wenn nicht anders vereinbart.

EN
General important information.
Please read carefully.

Product must be eliminated differentliy from the rest of the urban waste.

Technical conformity in accordance with EN directives

Sense System has a protective low operating voltage of 48 V. System luminaires can also be mounted when the track is connected to the power supply. That is to say, the luminaires can be hot-plugged**. Mounting or removing luminaires should only be undertaken after being initially instructed by a qualified professional.

Luminiare / track systems only be used in interior spaces.

Installation to be carried out by qualified personnale only! Disconnect the system!

All technical data refer to the status quo when the data sheet was put together. Given that developments are part of a continuing process, all data provided is also subject to change. Custom-made products are manufactured individually, so values and dimensions may vary.

Photos and drawings show the luminiaires and system components for image purposes. We reserve the right to make adjustments to the electronics, equipment and design.

External dimmers are not permitted. The lighting is controlled exclusively via specified wireless Bluetooth interfaces via Casambi or Xicato.

We have been producing our highly original track system LightLight® since 1989. The trend towards digital lighting control gave rise to the development of Sense System® (48 V) in 2016. Sense System is based on the LightLight system and enables all aspects of digital lighting control using Bluetooth wireless technology. The luminaires and other devices applied on the track are operated via the system-relevant adapters. Buschfeld® lighting systems are self-sufficient single-wire systems. Without comparison and testing, NO lights and components from other manufacturers can be operated in Buschfeld lighting systems.LightLight® luminaires (12 V) cannot be operated on Sense System® (48 V) track. That said, LightLight systems can be converted to meet 48 V Sense System electronics, if inspected by a qualified electrician. Feel free to contact us: together we can determine what steps are required to convert your system.

Maximum load of the system. Given a maximum current of 12.5 A, this is limited to 48 V, thus corresponding to a load of 600 W.

Buschfeld Design offers two lighting control protocols within the Sense System®. The app/programs from Casambi or Xicato are absolutely necessary for the creation of light scenes, groups or other settings. The Sense System lumninaires are ready for use upon delivery. However, Buschfeld Design does not carry out initial settings or programming unless otherwise agreed.

Buschfeld Design GmbH Fon +49 221 93764-0 info@buschfeld.de www.buschfeld.de

buschfeld Sense System (48V)

CASAMBI

Buschfeld Leuchten mit Casambi Steuerung können mit Casambi kompatiblen Produkten (z.B. Schaltern/App) gesteuert werden.

www.buschfeld.de/how-it-works/48103

Buschfeld luminaires with Casambi control can be controlled with Casambi-compatible products (e.g. switches/app).

www.buschfeld.de/en/how-it-works/48103

Xicato

Die Leuchten mit Xicato Steuerung werden mit Desktop-, Browser- und mobilen Software gesteuert. Xicato hat seinen Quellcode und seine XIG-Gateway unter einer Standardlizenz MIT Free Open Source Software (FOSS) veröffentlicht. Dies ermöglicht Systemintegratoren, Softwareentwicklern von Drittanbietern und Benutzern gleichermaßen mehr Möglichkeiten bei der Inbetriebnahme, Steuerung, Verwaltung und Neukonfiguration der Leuchten im Professional Set-up.

www.buschfeld.de/how-it-works/48104

Luminaires with Xicato control are controlled with desktop, browser and mobile software. Xicato has released its source code and XIG gateway under a standard MIT Free Open Source Software (FOSS) license. This gives system integrators, third-party software developers and users alike more options when commissioning, controlling, managing and reconfiguring the luminaires in the professional set-up.

https://www.buschfeld.de/en/how-it-works/48104

Basic on/off

Leuchten mit Basic on/off können NICHT gedimmt oder anderweitig gesteuert werden.

Luminaires with Basic on/off CANNOT be dimmed or otherwise controlled.

DE
Installation und in Betriebnahme. Wichtige Information! Bitte sorgfältig lesen.

Übersicht aller Montageanleitungen

https://bit.ly/3Jb4eiN

Die Montage der Schienensysteme ist für das LightLight® und Sense System® gleich. Bitte beachten Sie dabei die Hinweise beim Anschliessen der Buschfeld Lichtschienen.

Beim Anschluss der Einspeisung und des Betriebsgerätes muss zwingend die + / - Polung beachtet werden!
+ Messing-Innenleiter der Schiene
- Schiene selbst
Die Polung ist auch mit einem Aufkleber auf der Einspeisung markiert.

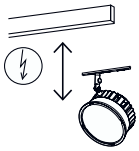

**Hot Plugging bezeichnen den Wechsel und die Wechselbarkeit von Systemkomponenten und Modulen im laufenden Betrieb des Systems. Bekannteste Beispiele für Hot-Plug-fähige Technologien sind allgemeine Computer-Schnittstellen wie USB, FireWire, PCMCIA oder auch Bluetooth zum Anschluss von Peripheriegeräten.

Verwenden Sie ausschliesslich die angegebenen Werkzeuge. Beachten Sie die angegebenen Schlüsselweiten und verschiedenen Drehrichtungen bei der Montage.

A T G G

Energieeffizienzklasse der Light Engine

EN
Instructions of Installation and Use. Important information! Please read carefully.

Overview of all assembly instructions

https://bit.ly/3w3Hiy9

The installation of the wall tracks is initially the same for the LightLight® and Sense System®. However, please note the instructions when connecting the Buschfeld light tracks.

Lighting tracks Sense System or LightLight: When connecting the infeed and the control gear, the + / - polarity must be observed!
+ Brass inner conductor of the track
- track itself
The polarity is marked with a sticker on the feed.

**Hot Plugging describes the installation and/or removal of system components and modules while the system is connected to the power supply. The best known exam ples of hot-pluggable technologies are general computer interfaces such as USB, FireWire, PCMCIA or even Bluetooth for connecting peripheral devices, or more specific examples.

Only use the specified tools. Observe the specified wrench sizes and different directions of rotation during assembly.

Energy efficiency class of the Light Engine

Pflege und Reinigung
Lechtenschirm mit einem weichen Tuch trocken abwischen. Bei starken Verunreinigungen das Tuch leicht mit Wasser anfeuchten. Keine Lösungsmittel oder Reiniger verwenden.

Cleaning and maintenance
To clean the shade wipe with a dry, soft cloth. Heavier soiling can be removed with a damp cloth. Chemical cleaners or solvents are not to be used.

Buschfeld Design GmbH Fon +49 221 93764-0 info@buschfeld.de www.buschfeld.de

buschfeld × CASAMBI

Für die Erstinstallation der Casambi App und die Sicherung auf einem Casambi Server ist ein WLAN-Zugang Voraussetzung.

Leuchten und App arbeiten mit Bluetooth / Funkstandard.

Casambi im App-Store

https://apple.co/3q5hHRL

Casambi App bei Google Play

https://bit.ly/3q24IjA

Erste Schritte in der Casambi App

https://www.buschfeld.de/how-it-works/48112

buschfeld × CASAMBI

When installing the Casambi app for the first time, and to ensure the backup on a Casambi server, WLAN access is required.

Luminaires and app operate via Bluetooth Mesh Casambi.

https://apple.co/3Jg6C7R

https://bit.ly/3JaEO4V

Casambi App 1st steps

https://www.buschfeld.de/en/how-it-works/48112